BENITO
–Urban

Trajana Flex
H410

T +34 938 521 000
www.benito.com

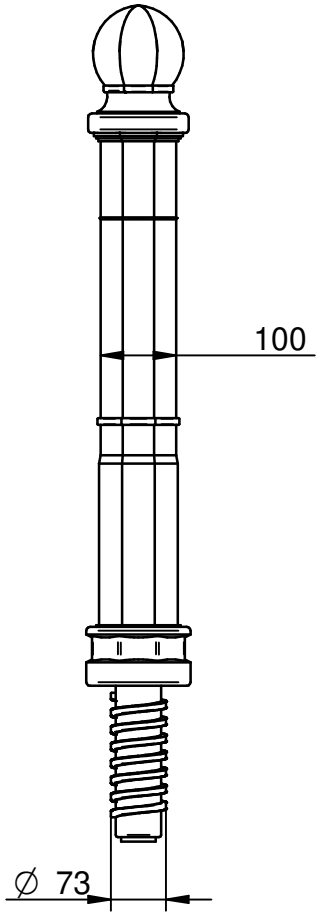

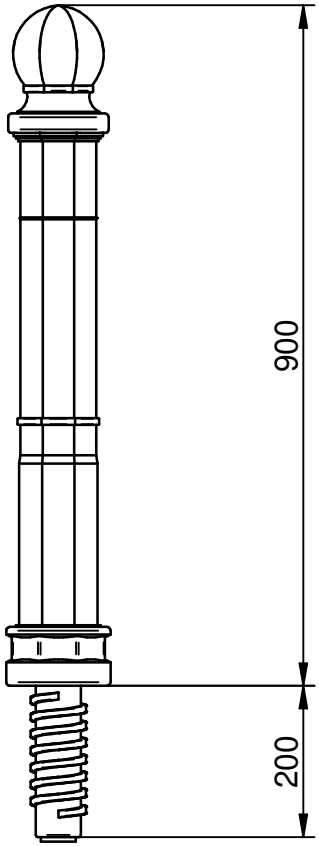

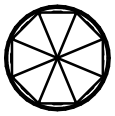

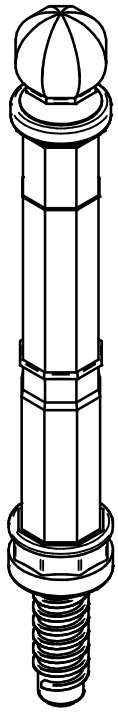

V 01 27/02/2020