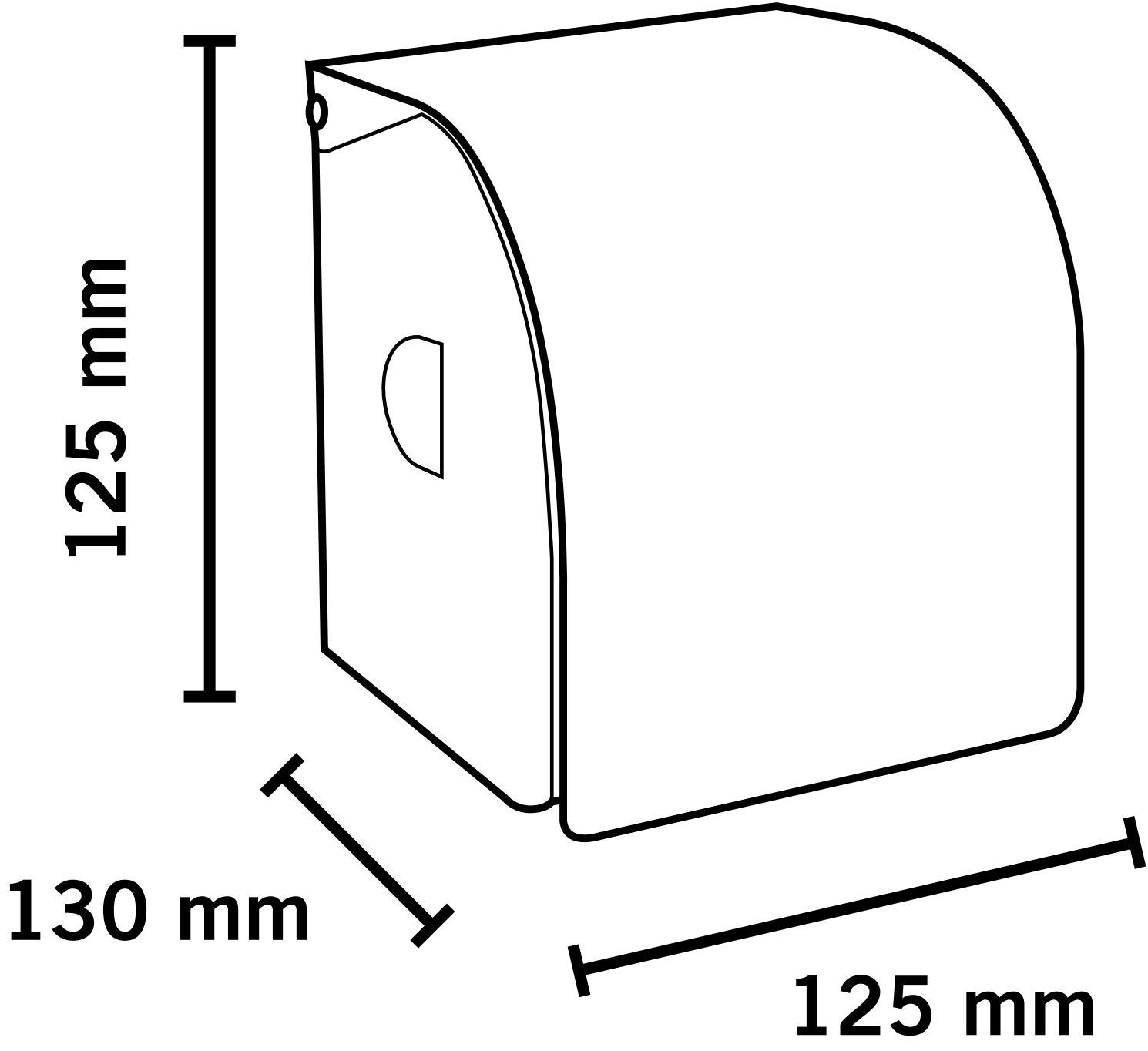
125 mm
130 mm
125 mm